TECNOCAT
TECNOLOGÍA E
INNOVACIÓN

TECNOCAT WORK SERIES

VC-F2

www.tecnocat.com

VC-F2

WORK SERIES

VC-F2

	300 kg
EN13155	150 kg
kg	20 kg

VERTICAL WORK

VERTICAL WORK

HORIZONTAL WORK

WORK SERIES

EN13155	OK
kW	80 W

	83 L/min
	0º - 90º (two positions hanged)
	OK - BATTERY 12V -Running period 20h aprox
	–

VC-F2

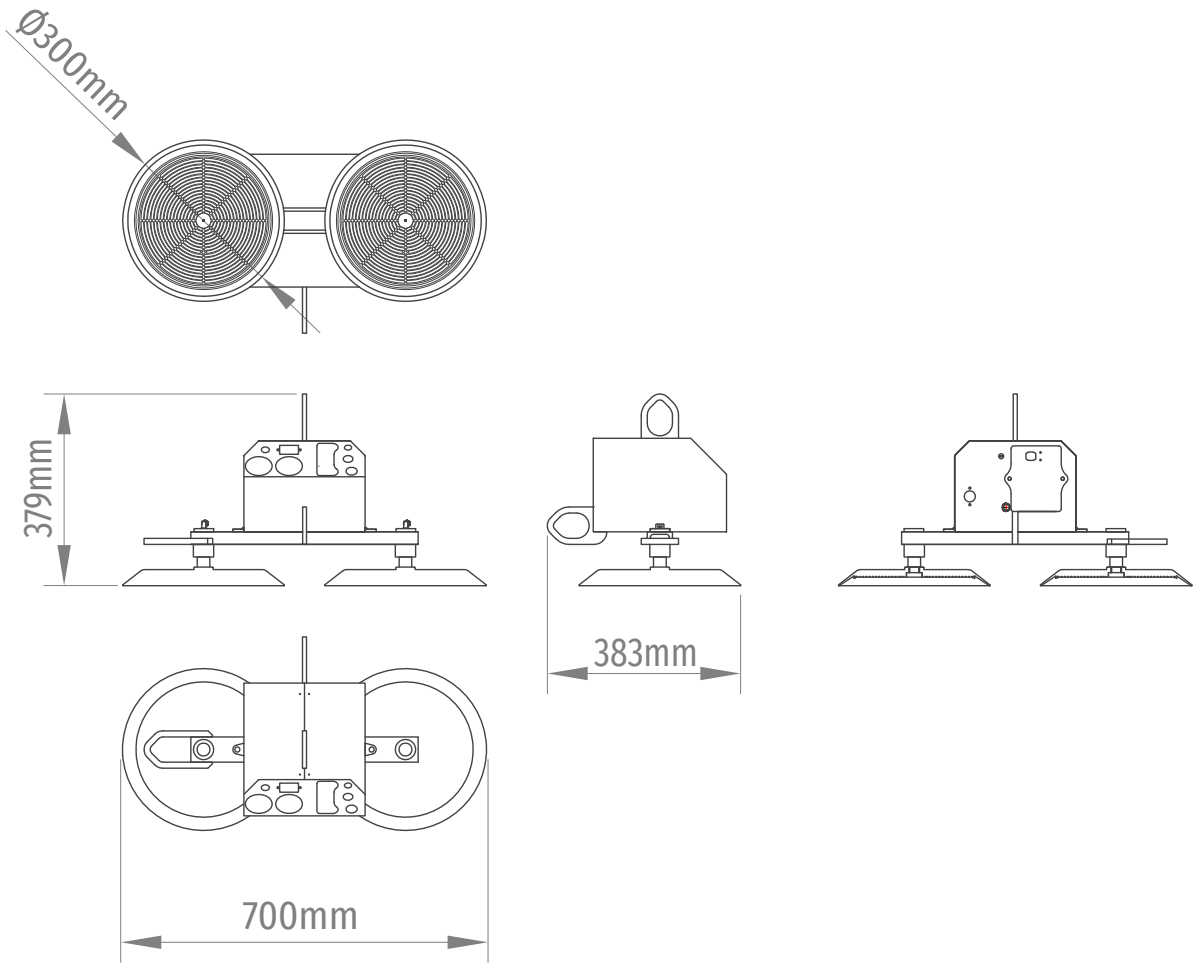

OPTIONALS

- **CM-VC** METAL BOX
- **FU-P** COVERS

PICTOGRAMS

- ELECTRICAL POWER
- NOMINAL ELECTRIC POWER
- ENERGY AUTONOMY BY BATTERIES
- PNEUMATIC SUPPLY
- MAXIMUM LOAD CAPACITY
- MAXIMUM LOAD CAPACITY ACCORDING EN-13155
- TILTING EQUIPMENT
- MANUALLY TILTING EQUIPMENT
- PNEUMATIC TILTING EQUIPMENT
- MOTORIZED TILTING EQUIPMENT
- HYDRAULIC TILTING EQUIPMENT
- ROTATION EQUIPMENT
- MANUAL ROTATION EQUIPMENT
- PNEUMATIC ROTATION EQUIPMENT
- MOTORIZED ROTATION EQUIPMENT
- HYDRAULIC ROTATION EQUIPMENT
- EQUIPMENT WEIGHT
- VACUUM SYSTEM AIR FLOW
- PUSHBUTTON CABLE LENGTH
- WIRELESS PUSHBUTTON
- LOAD CAPACITY ACCORDING EN-13155
- EQUIPMENT SUPPORT SYSTEM
- LIFTING CRANE USABLE ROTATION

TECNOCAT
GLASS MOVEMENT

TECNOCAT 21, S.L. Av. del Coure 4, Pol.Ind. Argenteria 43470 - La Selva del Camp (Tarragona) SPAIN
+34 977 76 61 97 | info@tecnocat.com **www.tecnocat.com**